RP 204

Spare parts list

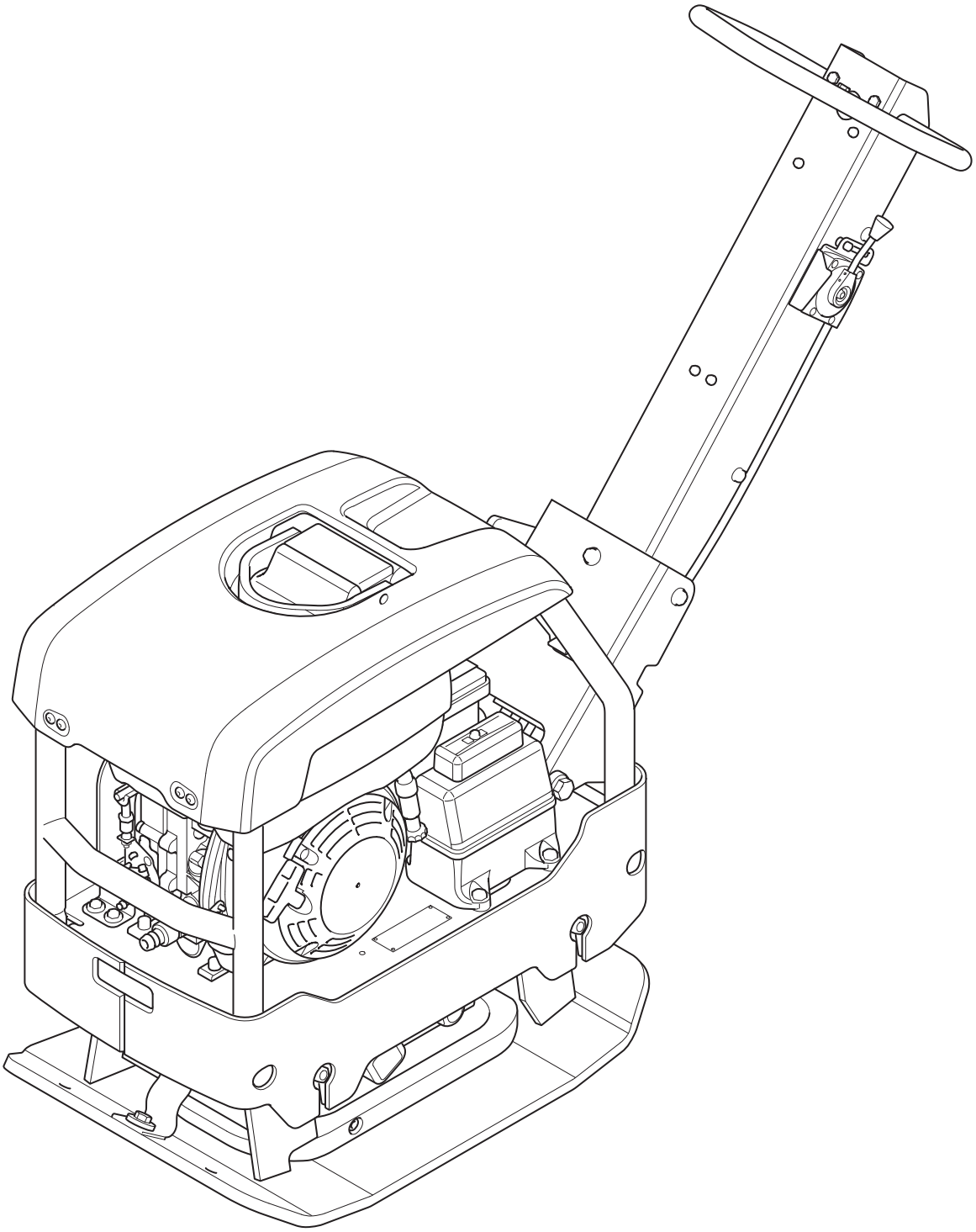

2026-03-02

RP 204
GROUND PLATE AND ECCENTRIC ELEMENT INSTALLATION

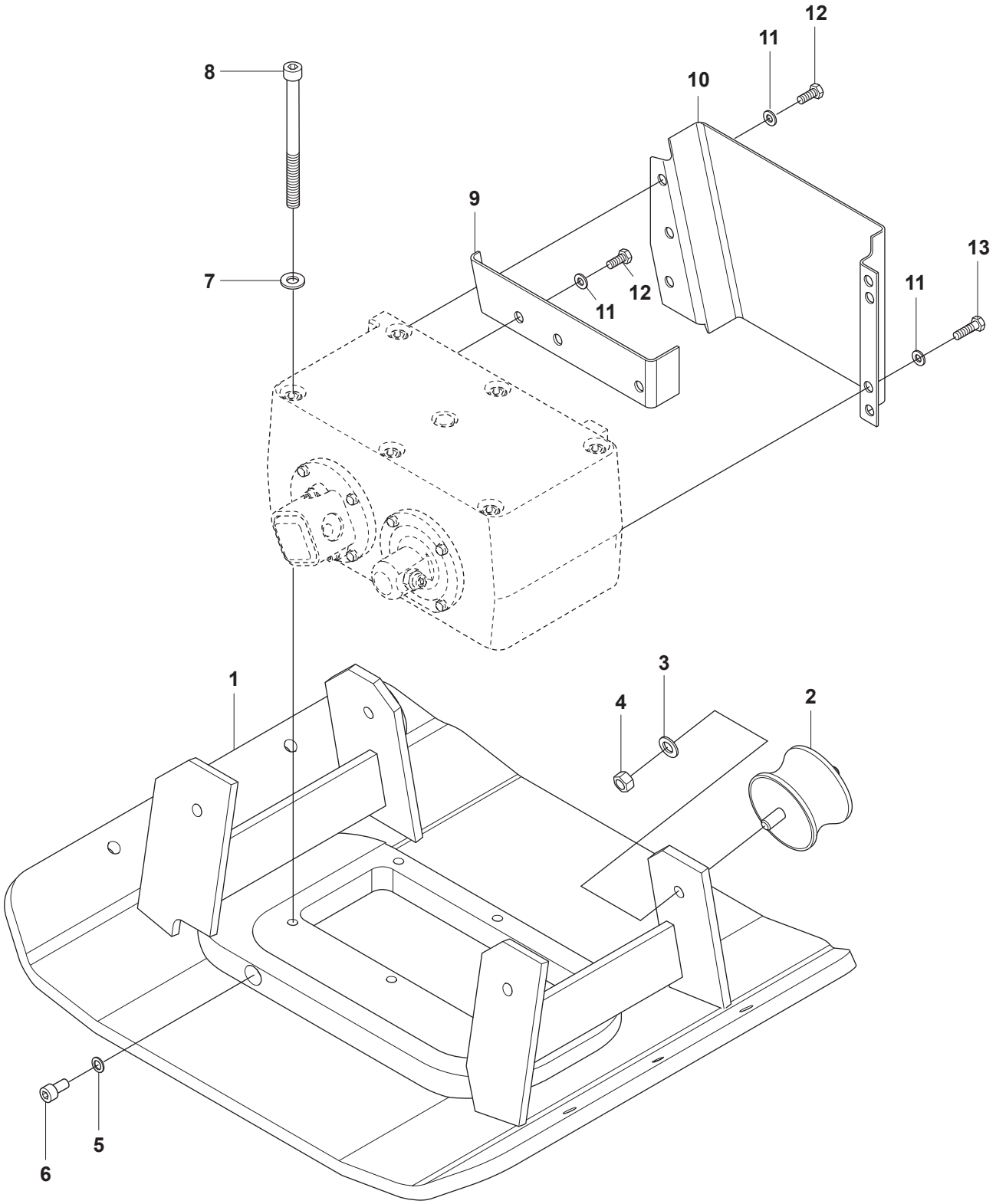

REF.	PART NO.	DESCRIPTION	REMARK	QTY.	KIT
1	595127701	PLATE	GROUND PLATE	1	
2	594327001	ABSORBER	SHOCK ABSORVER	4	
3	595113401	WASHER	DIN125	8	
4	595351801	NUT	M12	4	
5	594512101	WASHER		1	
6	594120601	SCREW		1	
7	595113001	WASHER		6	
8	595347301	SCREW	M12 x 160 mm12.9GEOMET®	6	
9	594328601	COVER		1	
10	594328701	COVER	BELT COVER	1	
11	595036601	WASHER	DIN125	8	
12	594117901	SCREW	M8 x 20	8	
13	595344301	SCREW		2	

RP 204
ENGINE PLATE

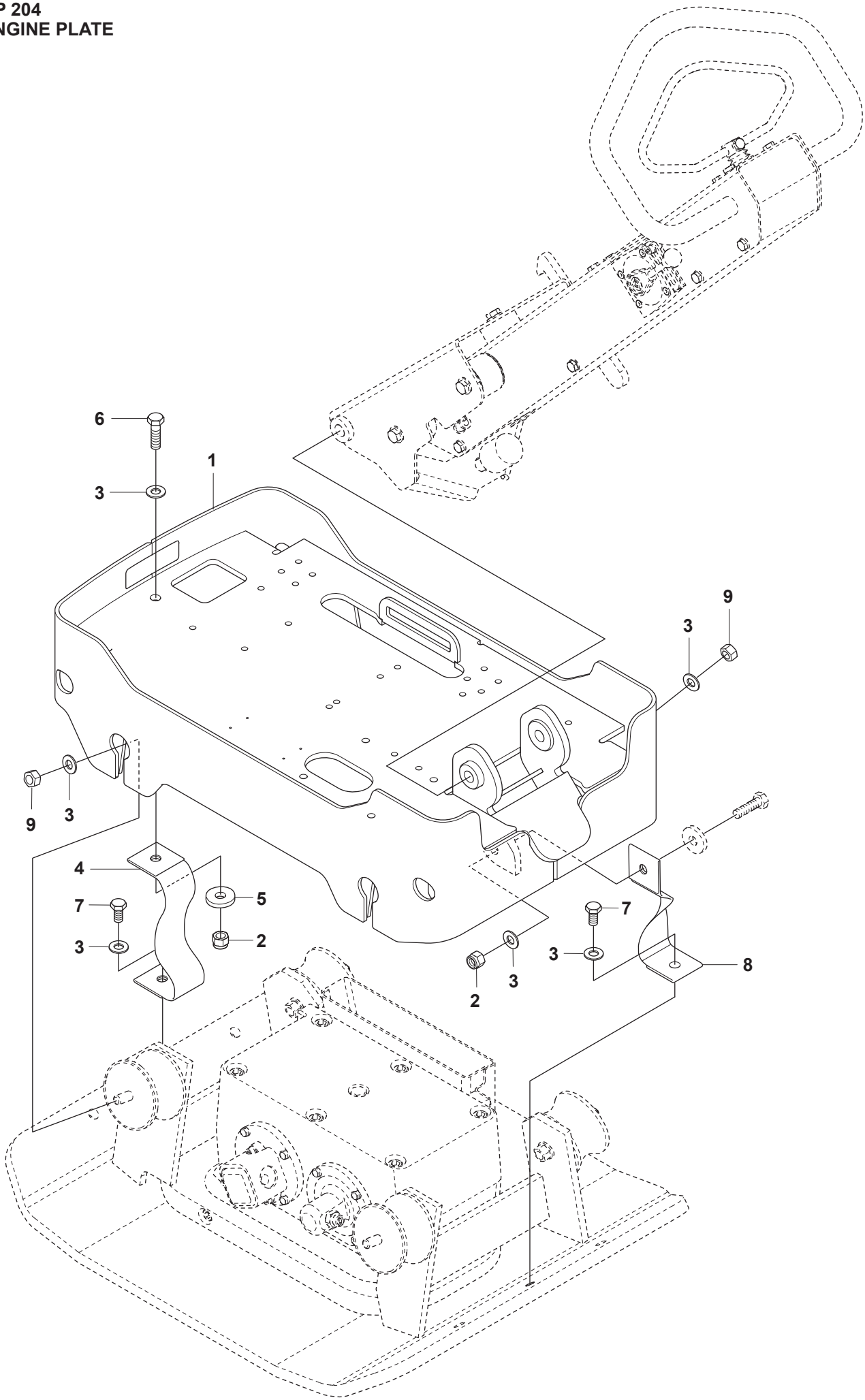

REF.	PART NO.	DESCRIPTION	REMARK	QTY.	KIT
1	596461501	PLATE	ENGINE PLATE	1	
2	595112701	NUT		2	
3	595113401	WASHER	DIN125	10	
4	594143001	STRAP		1	
5	594124001	WASHER	13x36x6 mm, 0.51x1.42x0.24 ". 300HV	4	
6	594119101	SCREW	DIN933	2	
7	595345301	SCREW		2	
8	594141501	STRAP		1	
9	595029401	NUT		4	

RP 204
ECCENTRIC ELEMENT

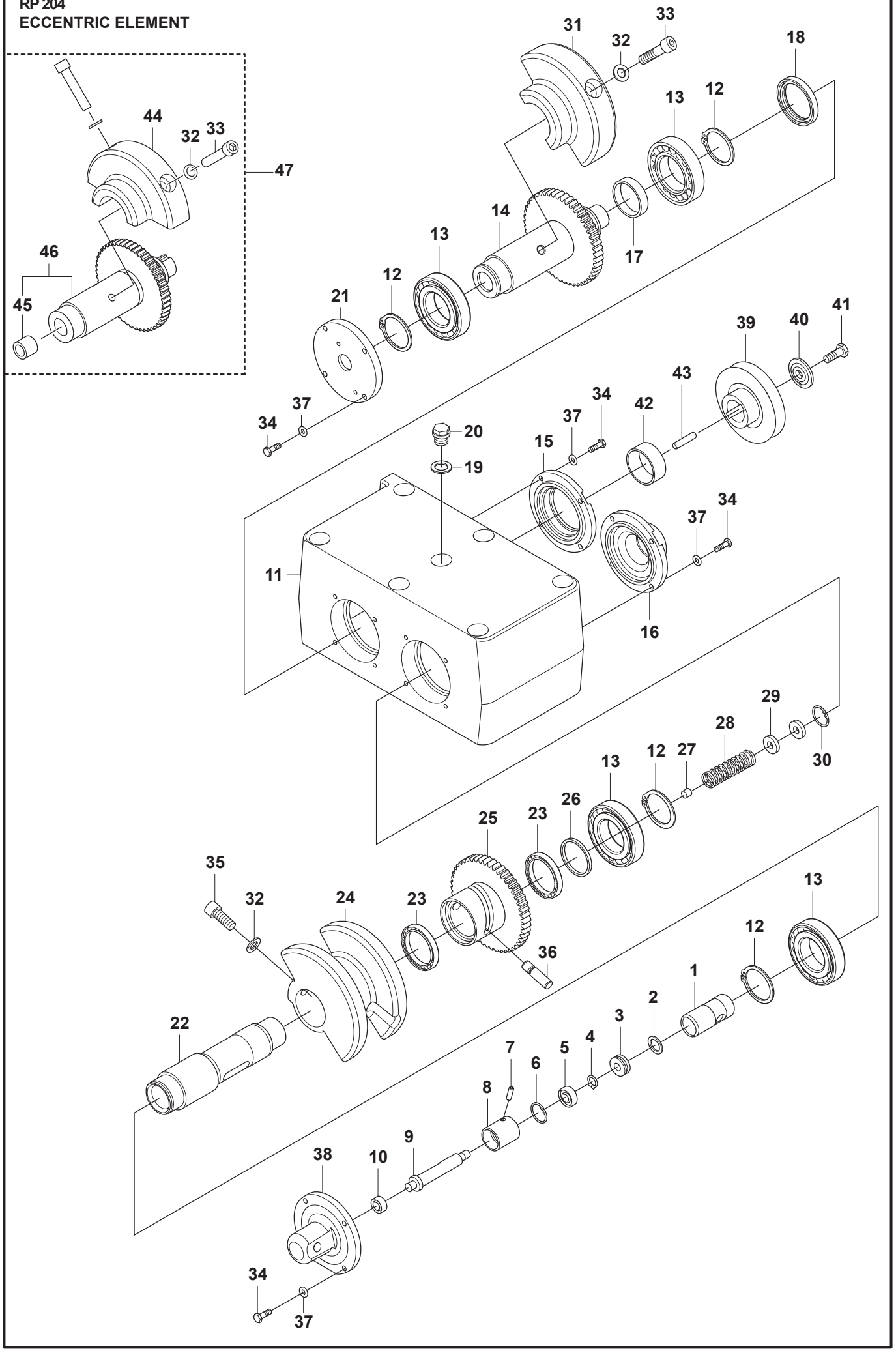

REF.	PART NO.	DESCRIPTION	REMARK	QTY.	KIT
1	594643501	PISTON		1	
2	594647701	SPRING WASHER		1	
3	594647601	BALL BEARING		1	
4	595353301	CIRCLIP		1	
5	594647501	BALL BEARING		1	
6	594266401	RING		1	
7	595031101	PIN	M6 x 20 mm DIN 1481	1	
8	594645001	CAP		1	
9	594643301	PISTON ROD		1	
10	594332201	SEALING		1	
11	594436001	HOUSING		1	
12	595114101	CIRCLIP		4	
13	594531101	ROLLER BEARING		4	
14	594487201	SHAFT	Rev B - Not supplied anymore See SBB3250032A-07	1	
15	594435801	COVER		1	
16	594643701	COVER		1	
17	594325901	SPACER RING		1	
18	594547401	SEALING		1	
19	595047801	GASKET		1	
20	595048301	PLUG	M16	1	
21	594435901	COVER		1	
22	594643601	SHAFT		1	
23	594550501	BALL BEARING		2	
24	594326701	ECCENTRIC		1	
25	594644901	GEAR WHEEL		1	
26	594326001	SPACER RING		1	
27	594546501	STOP SCREW		1	
28	594326901	SPRING		1	
29	594326201	WASHER		2	
30	595046001	RETAINER RING		1	
31	594356201	ECCENTRIC	Not supplied anymore SeeSB B3250032A-07	1	
32	594534801	WASHER	12x22x2	2	
33	594526301	SCREW	M12 x 60 mm10.9GEOMET®	1	
34	595109801	SCREW	M6x20 mm 8.8 A2K	16	
35	594526201	SCREW	M12 x 30mm 10.9GEOMET®	1	
36	594325801	PIN		1	
37	595036501	PLANE WASHER	6,4x12x1,5	16	
38	594643201	CYLINDER		1	
39	594478201	PULLEY		1	
40	594326301	WASHER		1	
41	595071101	SCREW		1	
42	594547501	RING		1	

43	595050801	KEY		1	
44	594356202	ECCENTRIC	See SB B3250032A-07, FromSN 202529100006	1	
45	594548801	SLEEVE		1	
46	594487201	SHAFT		1	
47	594487202	SHAFT	Shaft Complete See SBB3250032A-07, From SN 202529100006	1	

RP 204
ENGINE INSTALLATION - HONDA

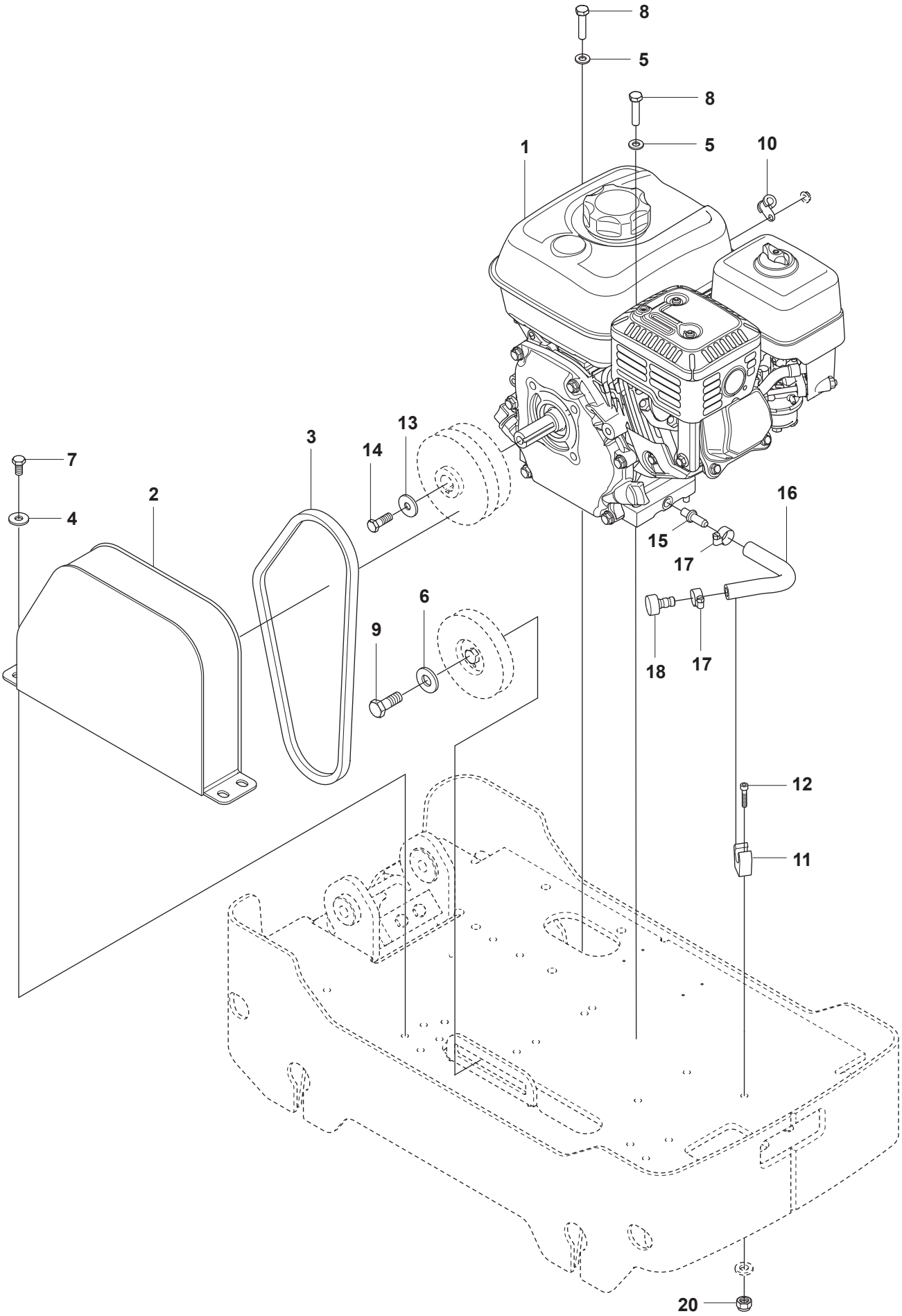

REF.	PART NO.	DESCRIPTION	REMARK	QTY.	KIT
1	594472701	ENGINE	HONDA GX200UT-SM-12-SD	1	
2	595369801	BELT GUARD		1	
3	594332801	DRIVE BELT		1	
4	594123401	WASHER	M08 8,4x22x3,0 300 HV	4	
5	595036601	WASHER	DIN125	4	
6	595112801	WASHER	10.5 x 22 x 4 mm, 0.41 x0.87 x 0.16 in. 300 HV	1	
7	595110101	SCREW	M8 x 16	4	
8	595110201	BOLT		4	
9	595071101	SCREW		1	
10	595037501	CLAMP		1	
11	594331001	CLIP		1	
12	595990501	SCREW	M5 x 25 mm	1	
13	595112901	WASHER	8.4 x 26 x 4 mm, 0.33 x 1.02x 0.16 in. 300 HV	1	
14	595033401	SCREW		1	
15	594648201	HOSE CONNECTOR		1	
16	594147801	HOSE		1	
17	595454601	CLAMP		2	
18	594147301	PLUG		1	
20	595352401	NUT		1	

RP 204
ENGINE - HONDA GX200UT2-SM-12-SD

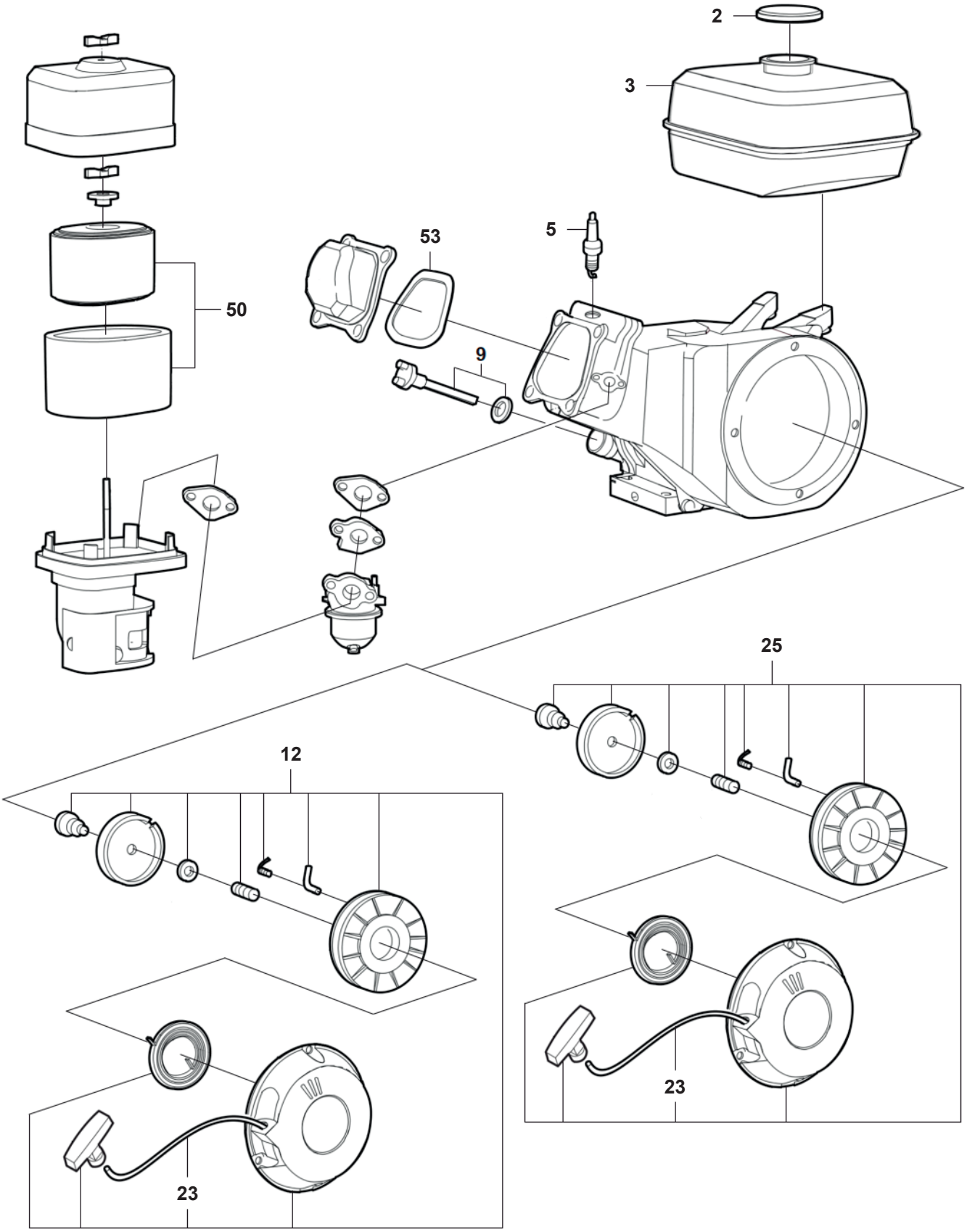

REF.	PART NO.	DESCRIPTION	REMARK	QTY.	KIT
2	594609101	FUEL CAP		1	
3	594204501	FUEL TANK		1	
5	595051301	SPARK PLUG		1	
9	594203801	OIL	DIPSTICK	1	
12	594602701	STARTER	Painted red, Handle valid up to engine SN 1517328 grip starter, from engine SN 1517329	1	
23	595049101	ROPE		1	
25	594205601	STARTER	Painted black, grip valid upto engine serial number1517328 handle from engineserial number 1517329	1	
50	594582301	AIR FILTER		1	
53	595048801	GASKET		1	

RP 204
HYDRAULIC SYSTEM

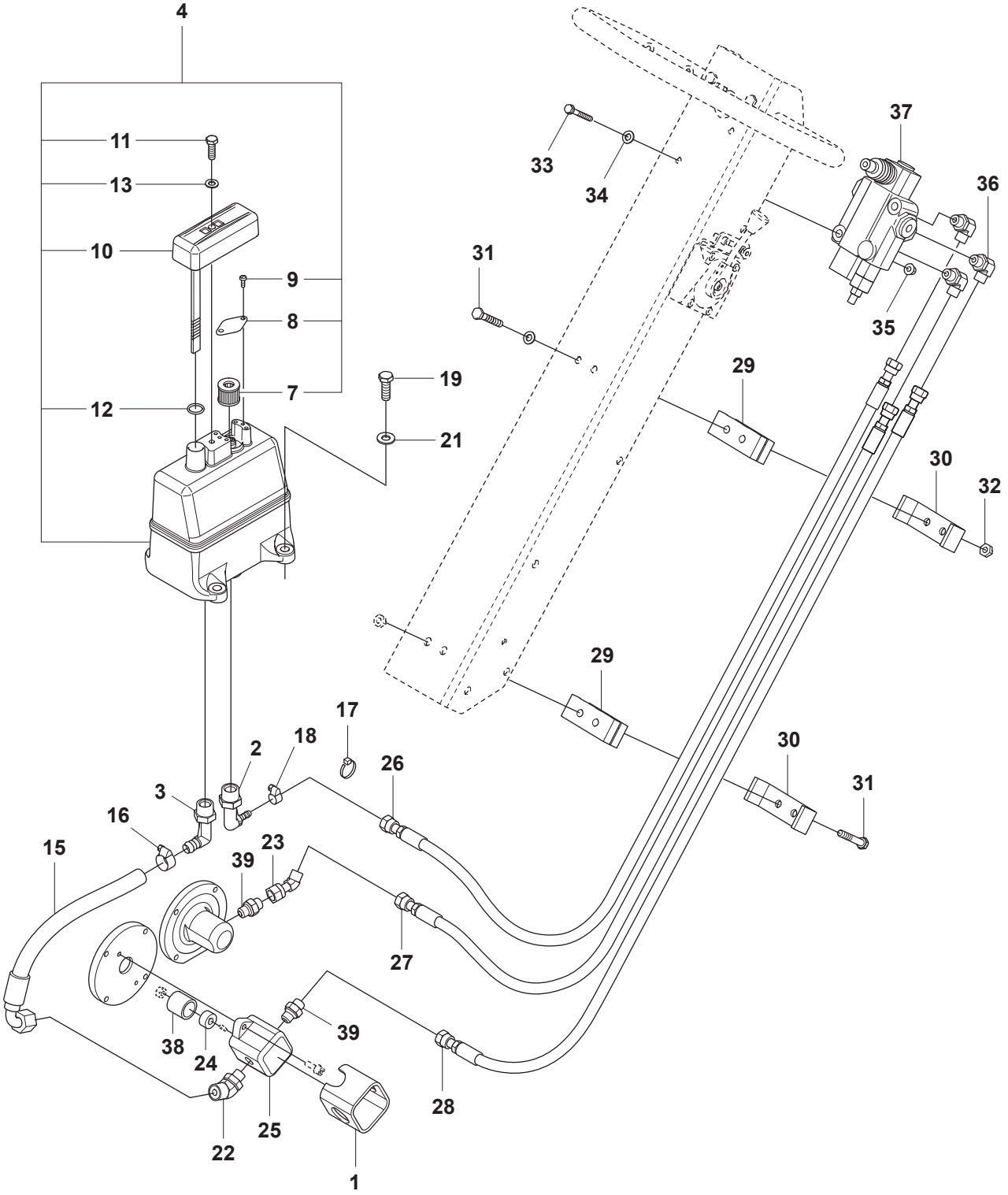

REF.	PART NO.	DESCRIPTION	REMARK	QTY.	KIT
1	594324301	PROTECTIVE COVER		1	
2	594426001	ADAPTER		1	
3	594426101	ADAPTER		1	
4	594426301	HYDRAULIC TANK	Complete	1	
7	594445501	AIR FILTER		1	
8	594445401	FILTER HOLDER		1	
9	594838801	SCREW	K50 x 12 mm Type KX-PT	2	
10	594443101	COVER		1	
11	595033401	SCREW	M8x25 mm 8.8 A2K	1	
12	595047301	O-RING		1	
13	595036601	WASHER	8.4x 6x1.5 mm 300HV	1	
15	594488101	HYDRAULIC HOSE		1	
16	595454701	CLAMP		1	
17	595354201	CABLE		1	
18	595160701	HOSE CLAMP		1	
19	594118501	BOLT		4	
21	594747401	WASHER		1	
22	594523701	ELBOW		1	
23	594519101	ADAPTER		1	
24	594548901	GEAR		1	
25	594455301	PUMP		1	
26	595370601	HYDRAULIC HOSE		1	
27	595288301	HYDRAULIC HOSE		1	
28	595370501	HYDRAULIC HOSE		2	
29	594324001	BLOCK		2	
30	594147401	BRACKET		4	
31	595287101	SCREW		2	
32	595352301	NUT	M6 x 55 mm 8.8 A2K	2	
33	595110001	BOLT		2	
34	595036501	PLANE WASHER	M8	2	
35	595112601	NUT		3	
36	594127301	CONNECTOR		1	
37	594347601	VALVE		1	
38	594548801	SLEEVE		2	
39	595063001	CONNECTOR		2	

RP 204
THROTTLE CONTROL - HONDA

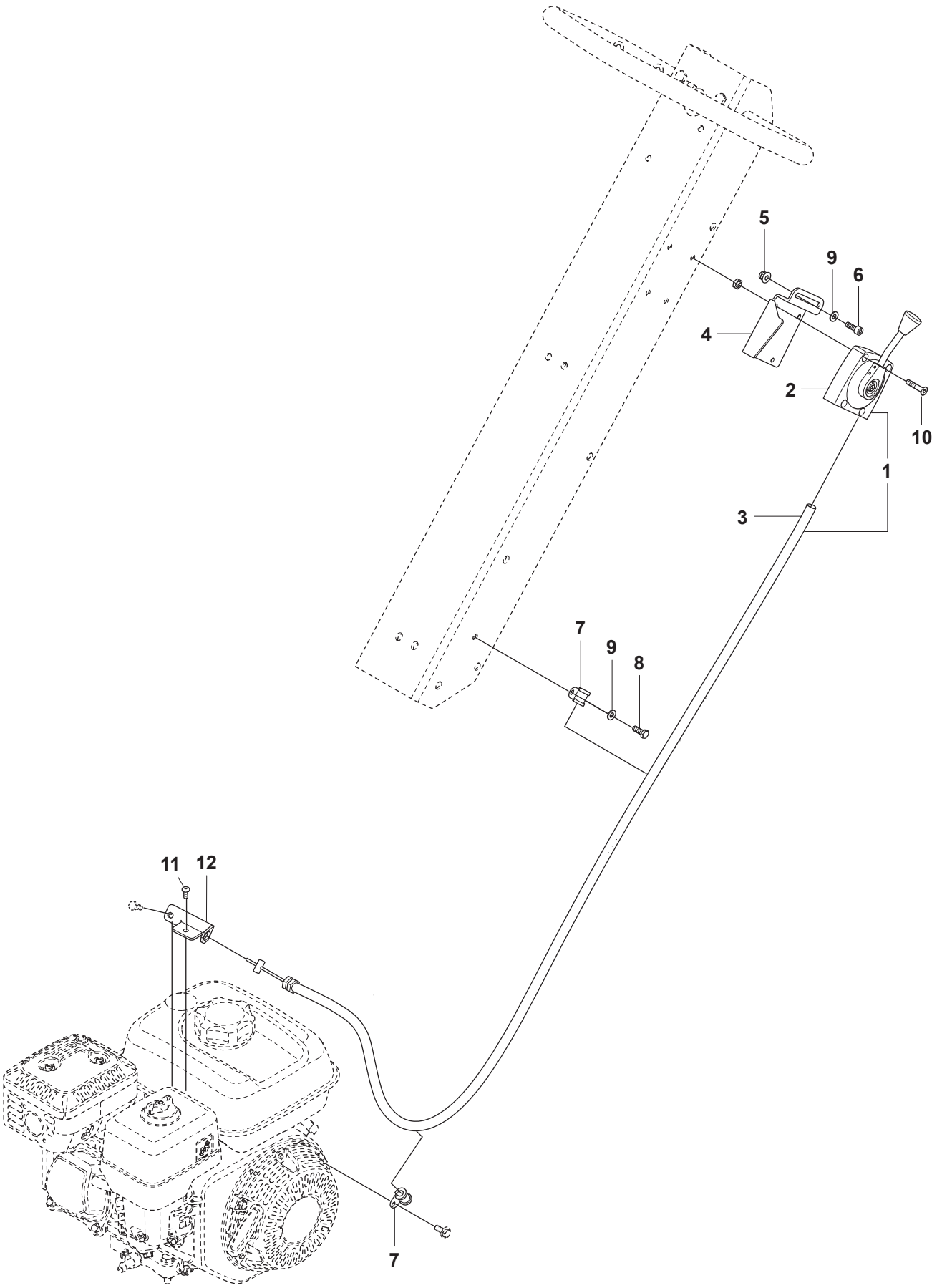

REF.	PART NO.	DESCRIPTION	REMARK	QTY.	KIT
1	595370901	THROTTLE		1	
2	594490701	LEVER		1	
3	594441501	CABLE		1	
4	594645101	BRACKET		1	
5	595112601	NUT	M8	1	
6	595033201	SCREW		2	
7	595037501	CLAMP		2	
8	595034201	SCREW	M6x16	2	
9	595036501	PLANE WASHER		1	
10	595349901	SCREW	M5 x 30 mm A2-70	4	
11	595065801	SCREW	M05x12	1	
12	594472601	BRACKET		1	

RP 204
BELT TIGHTENER

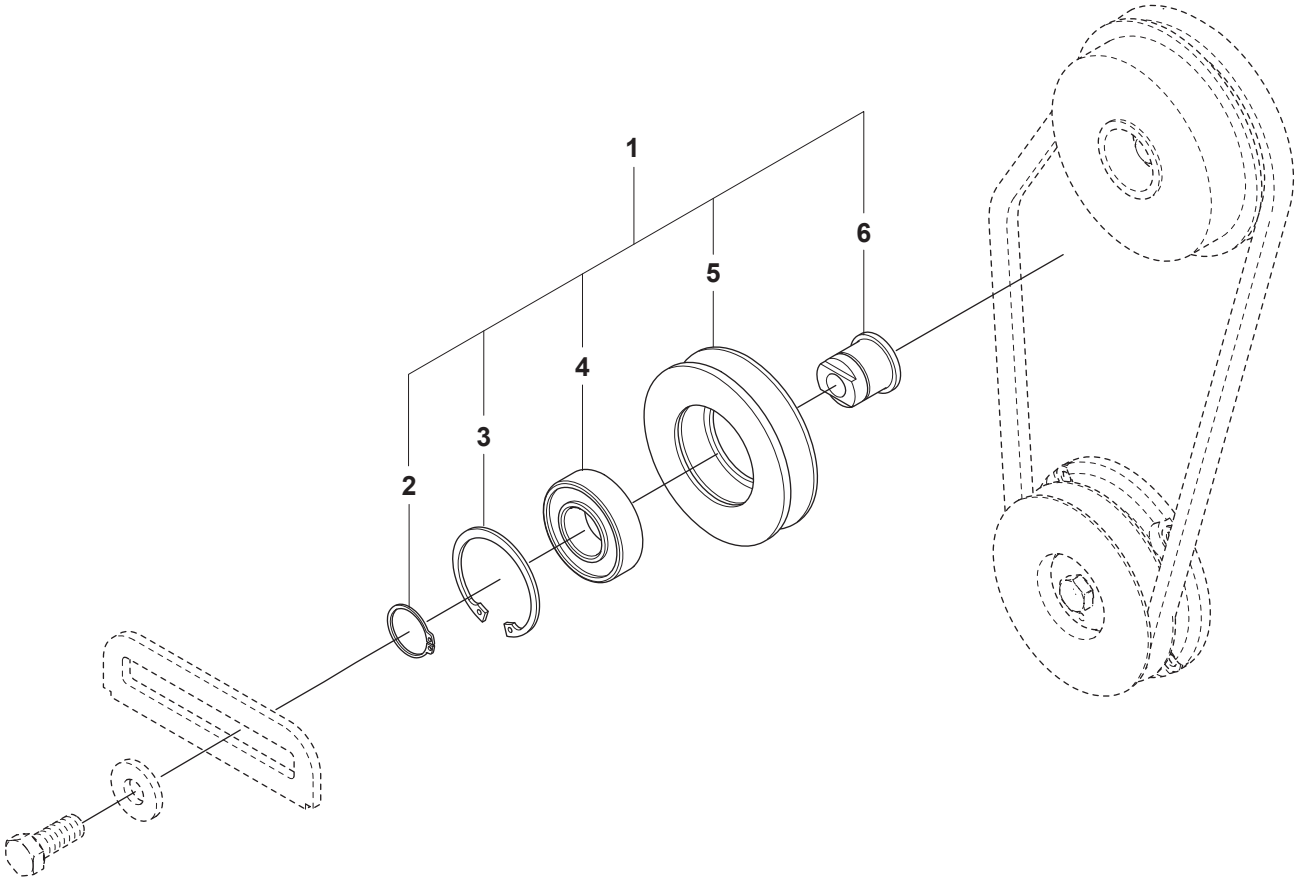

REF.	PART NO.	DESCRIPTION	REMARK	QTY.	KIT
1	594327901	DRIVE BELT		1	
2	594124701	RETAINER RING		1	
3	594125001	CIRCLIP		1	
4	595045001	BEARING		1	
5	594328001	DRIVE BELT		1	
6	594328101	SHAFT		1	

RP 204
CENTRIFUGAL CLUTCH - HONDA

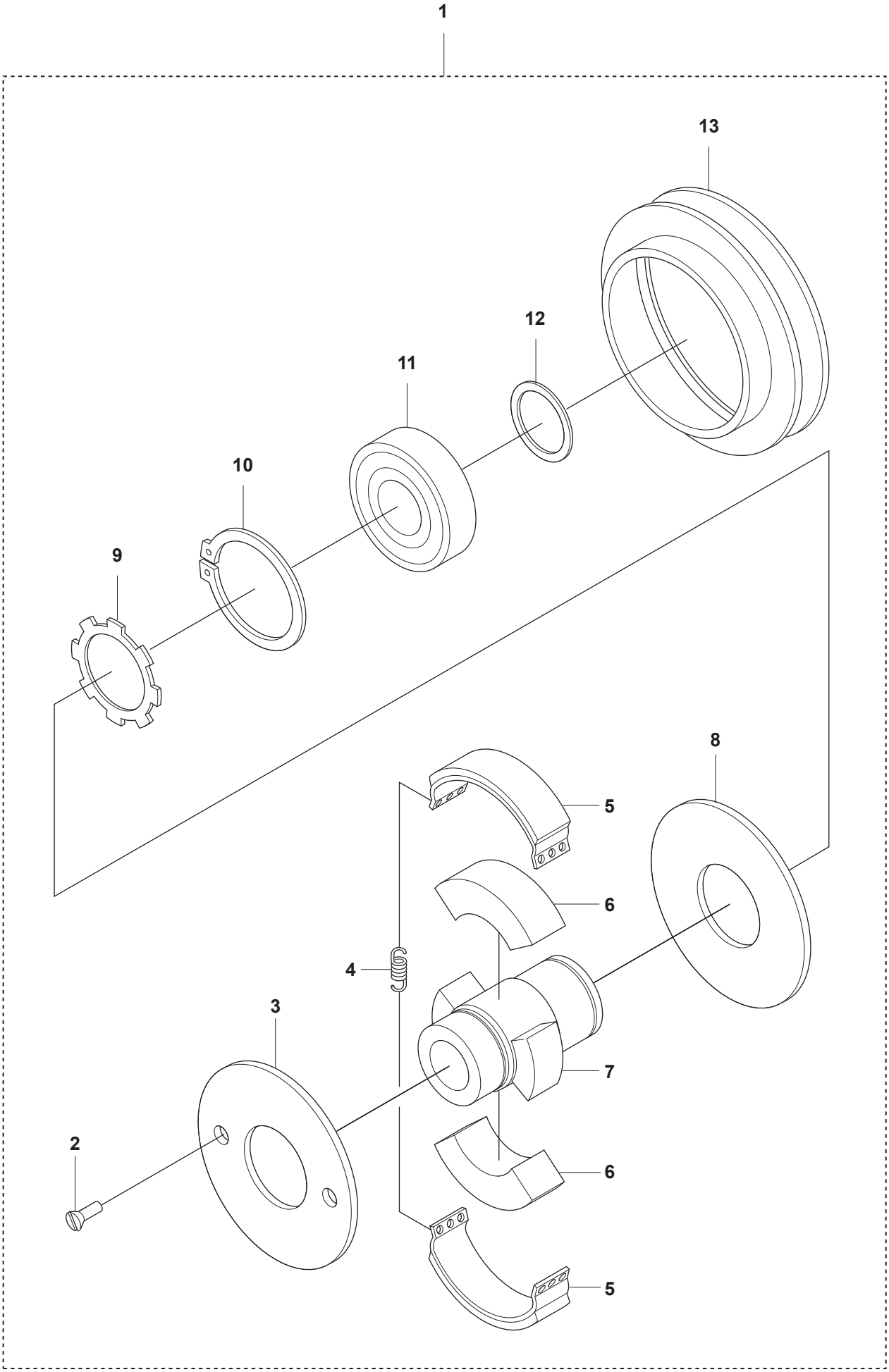

REF.	PART NO.	DESCRIPTION	REMARK	QTY.	KIT
1	594329801	CENTRIFUGAL CLUTCH		1	
2	595059301	SCREW		2	
3	594147601	CLUTCH COVER		1	
4	594563901	SPRING		2	
5	594551001	CLUTCH		2	
6	594301401	CLUTCH		2	
7	594560501	HUB		1	
8	594312301	COVER		1	
9	594311901	RING		1	
10	595046101	SNAP RING		1	
11	594259101	BALL BEARING		1	
12	595045501	SNAP RING		1	
13	594560301	PULLEY		1	

RP 204
FRAME AND HOODS

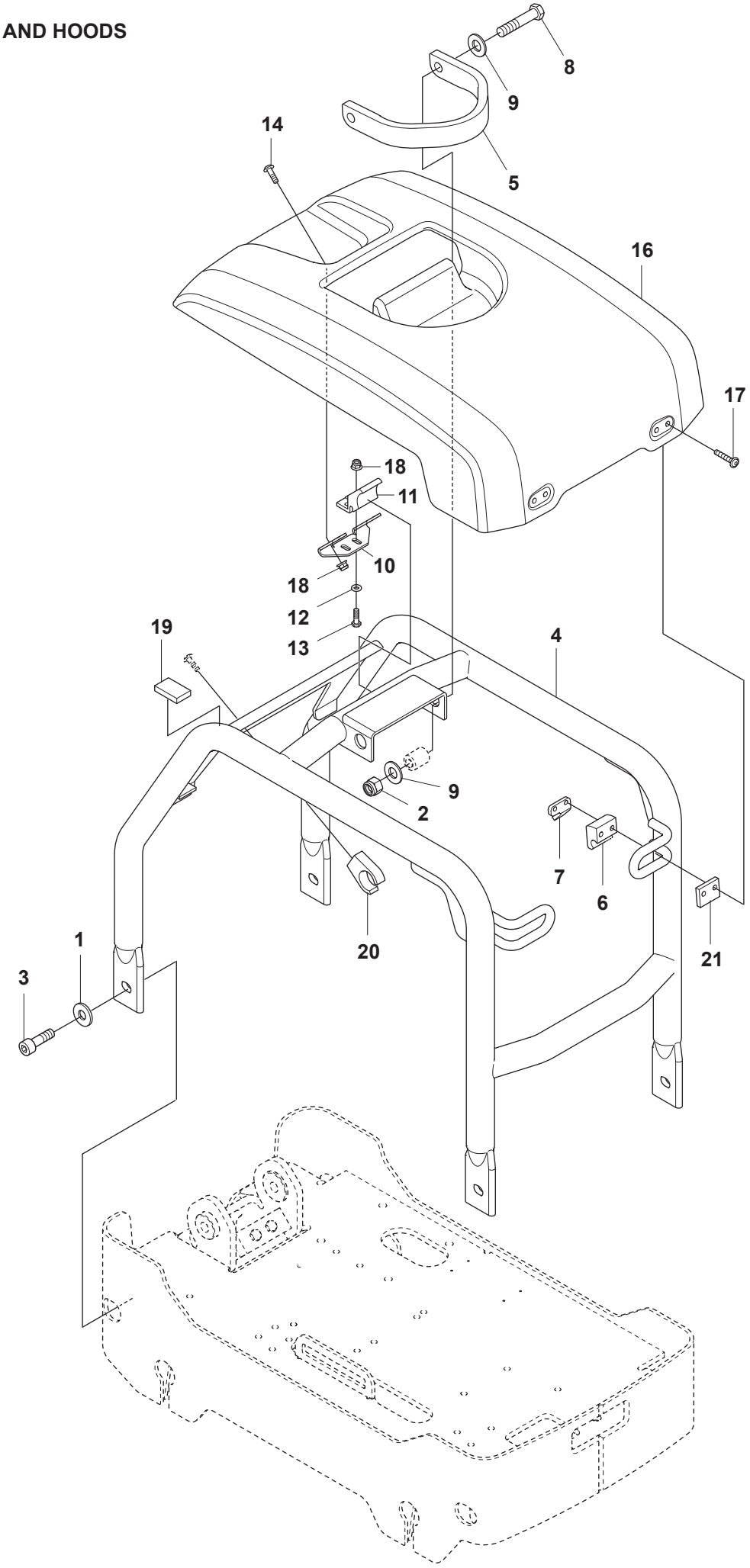

REF.	PART NO.	DESCRIPTION	REMARK	QTY.	KIT
1	595112801	WASHER	10.5 x 22 x 4 mm, 0.41 x0.87 x 0.16 in. 300 HV	4	
2	595112701	NUT		2	
3	594120901	SCREW	M12 x 40	4	
4	596462301	FRAME		1	
5	596465201	LIFTING HOOK		1	
6	594469601	CLIP		2	
7	594471501	STOP		2	
8	594119301	SCREW		2	
9	595115401	WASHER		4	
10	594469701	BRACKET		1	
11	594469501	CLIP		1	
12	595036501	WASHER		2	
13	595109801	SCREW		2	
14	595349601	SOCKET		4	
16	594187601	PROTECTIVE COVER		1	
17	594121101	SOCKET		4	
18	595112601	NUT		6	
19	595523901	PLATE		2	
20	594329501	CLIP		2	
21	594185201	PLATE		2	

RP 204
HANDLE

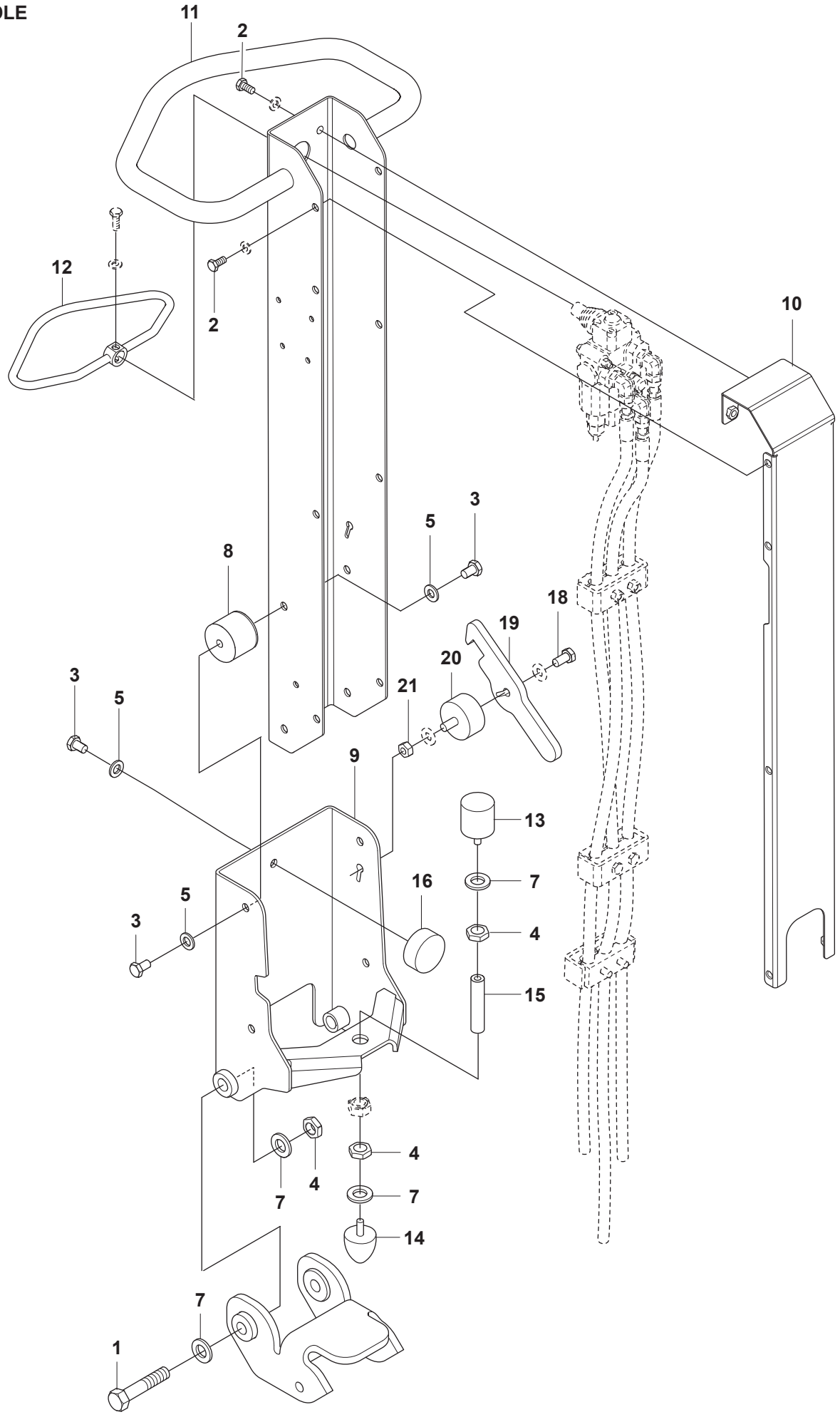

REF.	PART NO.	DESCRIPTION	REMARK	QTY.	KIT
1	595070501	SCREW	M1 x 65 mm 8.8 A3K	2	
2	595110101	SCREW	M8 x 16	10	
3	595344601	SCREW		9	
4	595112201	HEXAGON NUT		4	
5	594747401	WASHER		12	
7	595036701	WASHER		6	
8	594147501	ABSORBER		4	
9	596461301	HANDLE BRACKET		1	
10	594184801	LID		1	
11	596461401	HANDLE		1	
12	594642601	CONTROL LEVER		1	
13	594527201	ABSORBER		1	
14	594527301	ABSORBER		1	
15	594492401	STUD		1	
16	594518301	ABSORBER		1	
18	594118401	SCREW		1	
19	594451501	HOOK		1	
20	594462701	ABSORBER		1	
21	595029401	NUT		1	

RP 164
START UP KIT - HONDA

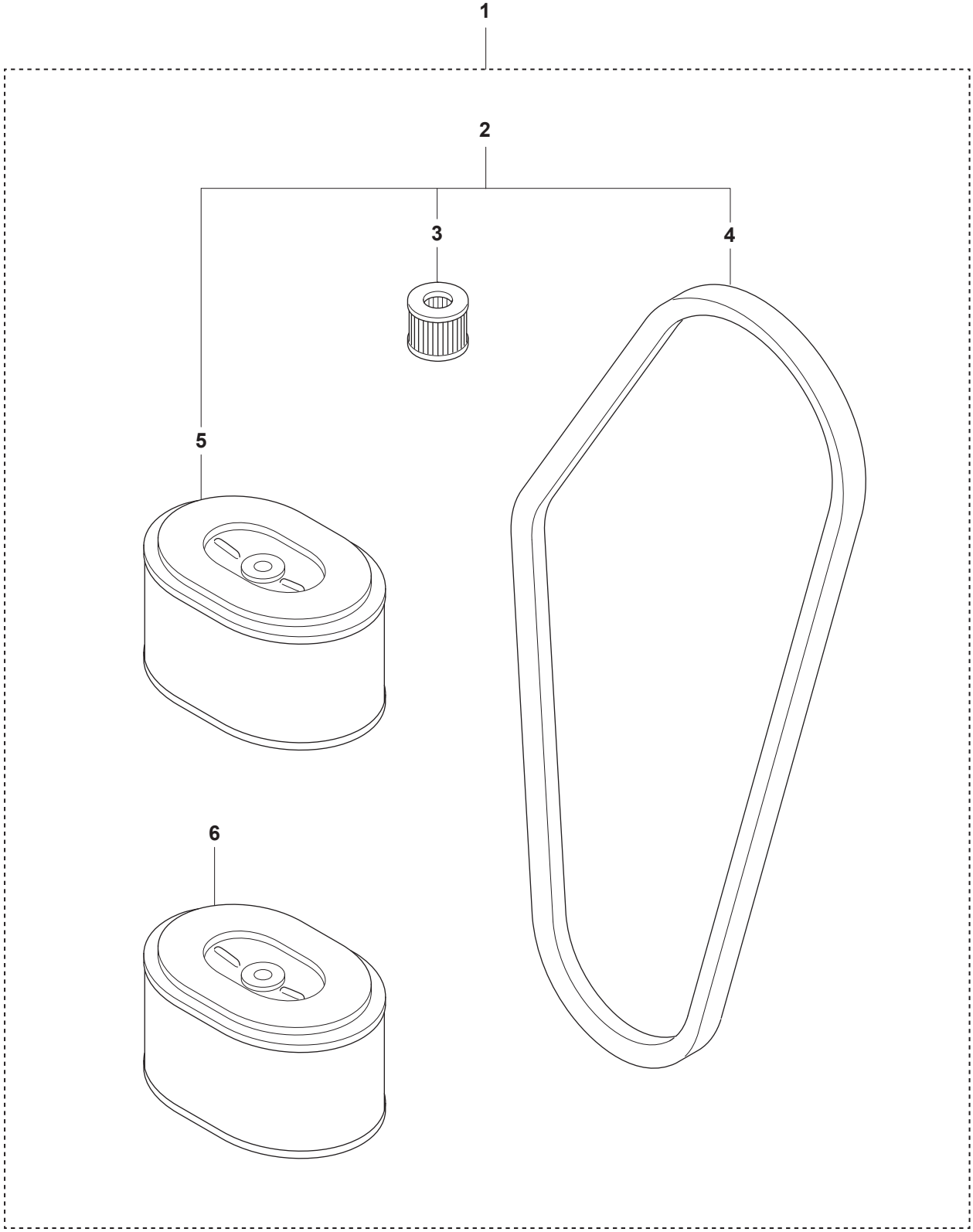

REF.	PART NO.	DESCRIPTION	REMARK	QTY.	KIT
1	599691301	KIT	Start up kit - Honda	1	
2	599712001	SERVICE KIT	12 months / 500 hoursservice kit - Honda	1	
3	594445501	AIR FILTER		1	
4	594332801	DRIVE BELT		1	
5	594302101	AIR FILTER		1	
6	594302101	AIR FILTER		1	

RP 204
ECCENTRIC ELEMENT REPAIR KIT

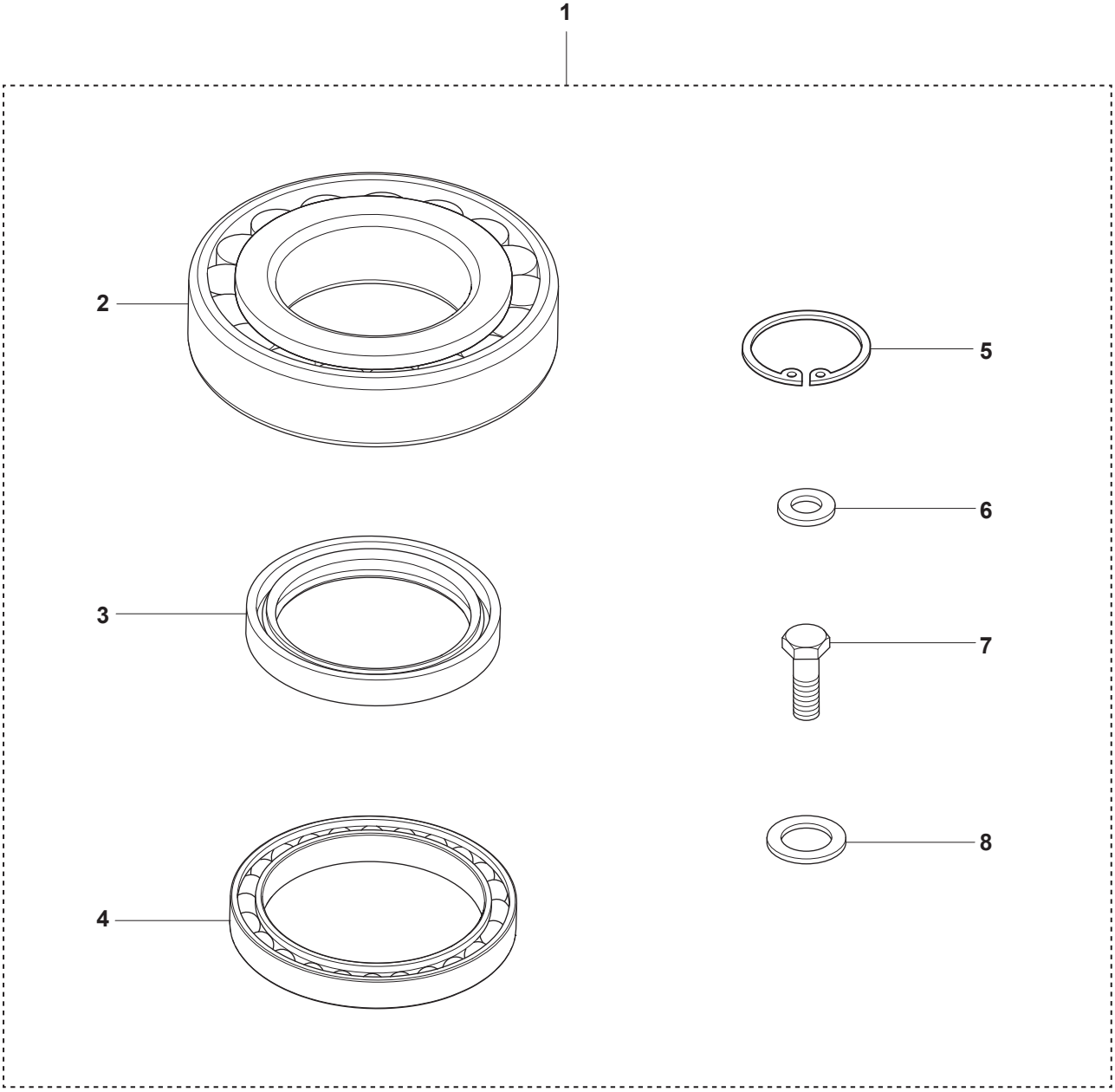

REF.	PART NO.	DESCRIPTION	REMARK	QTY.	KIT
1	594196701	REPAIR KIT		1	
2	594531101	ROLLER BEARING		4	
3	594547401	SEALING		1	
4	594550501	BALL BEARING		2	
5	595046001	RETAINER RING		1	
6	595036501	PLANE WASHER		16	
7	595109801	SCREW		16	
8	594512101	WASHER		1	

RP 204
SHOCK ABSORBER REPAIR KIT

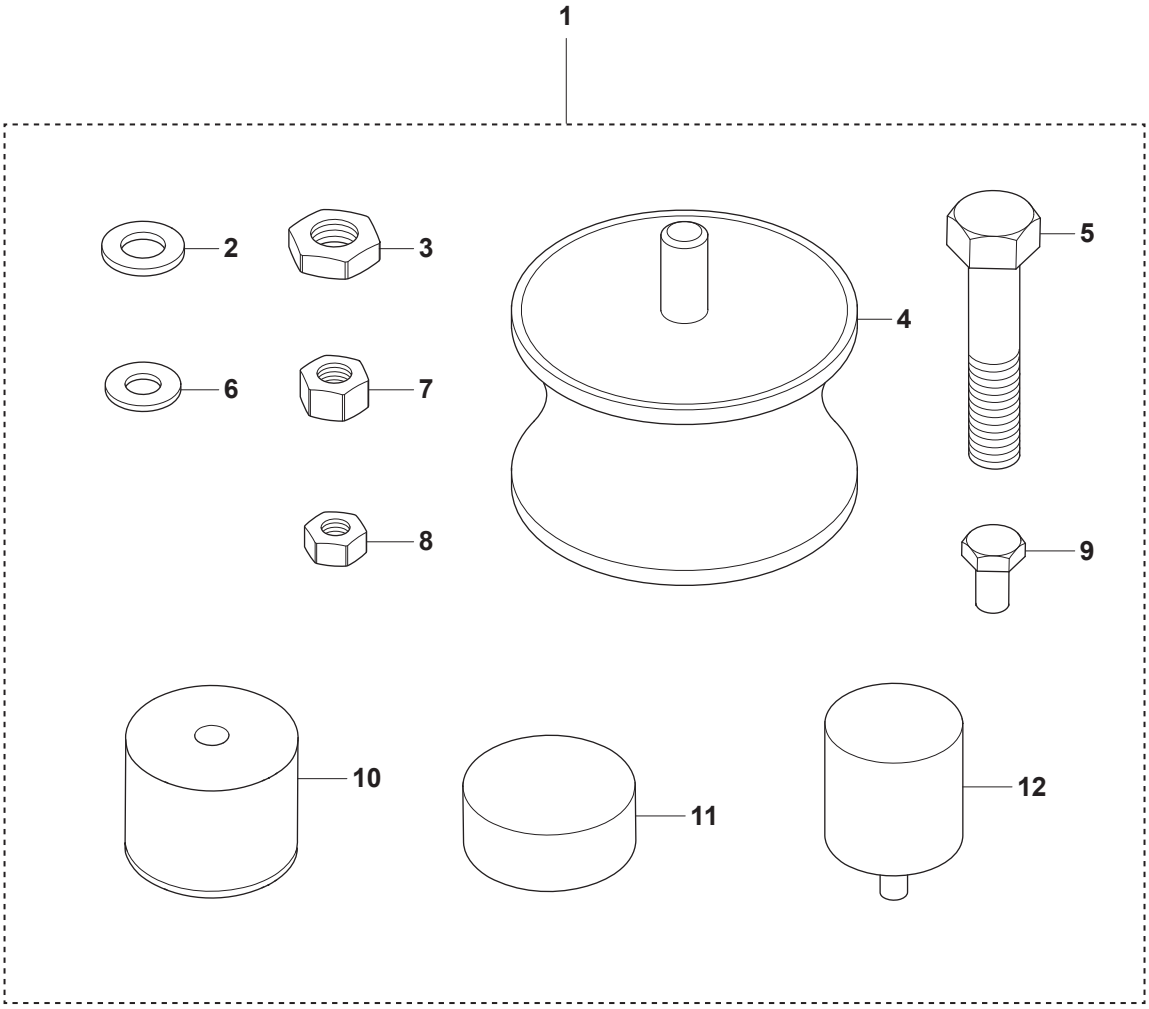

REF.	PART NO.	DESCRIPTION	REMARK	QTY.	KIT
1	594196101	REPAIR KIT		1	
2	595066801	WASHER		8	
3	595029401	NUT		1	
4	594327001	ABSORBER		4	
5	594118401	SCREW		1	
6	594747401	WASHER		6	
7	595112701	NUT		4	
8	595351801	NUT		4	
9	595344601	SCREW		8	
10	594147501	ABSORBER		4	
11	594518301	ABSORBER		1	
12	594462701	ABSORBER		1	

RP 204
FORWARD AND REVERSE PISTON REPAIR KIT

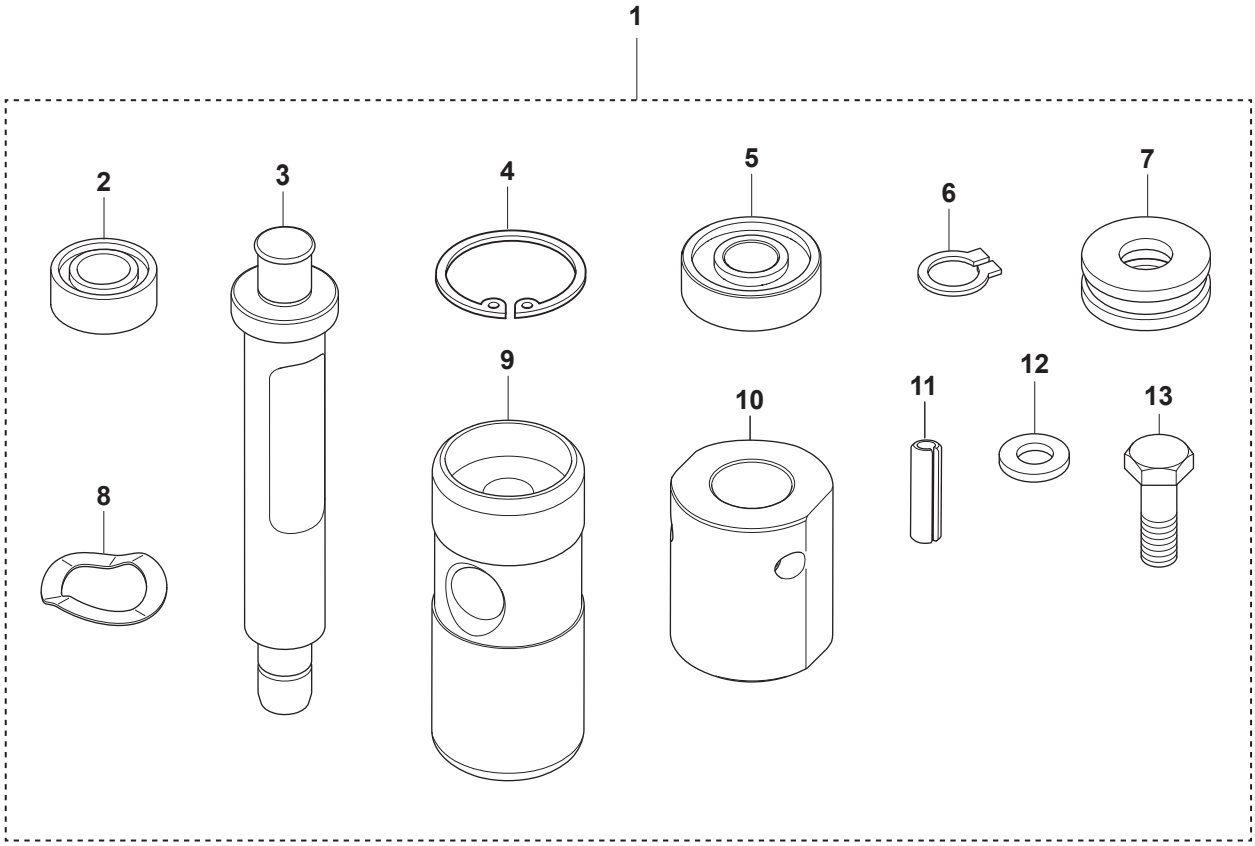

REF.	PART NO.	DESCRIPTION	REMARK	QTY.	KIT
1	594196501	REPAIR KIT		1	
2	594332201	SEALING		1	
3	594643301	PISTON ROD		1	
4	594266401	RING		1	
5	594647501	BALL BEARING		1	
6	595353301	CIRCLIP		1	
7	594647601	BALL BEARING	Thrust ball bearing	1	
8	594647701	SPRING WASHER		1	
9	594643501	PISTON		1	
10	594645001	CAP		1	
11	595031101	PIN	Ø6 x 20 mm DIN 1481	1	
12	595036501	PLANE WASHER		4	
13	595109801	SCREW		4	

RP 204
BLOCK PAVING PLATE KIT 510 MM (20. 1”)

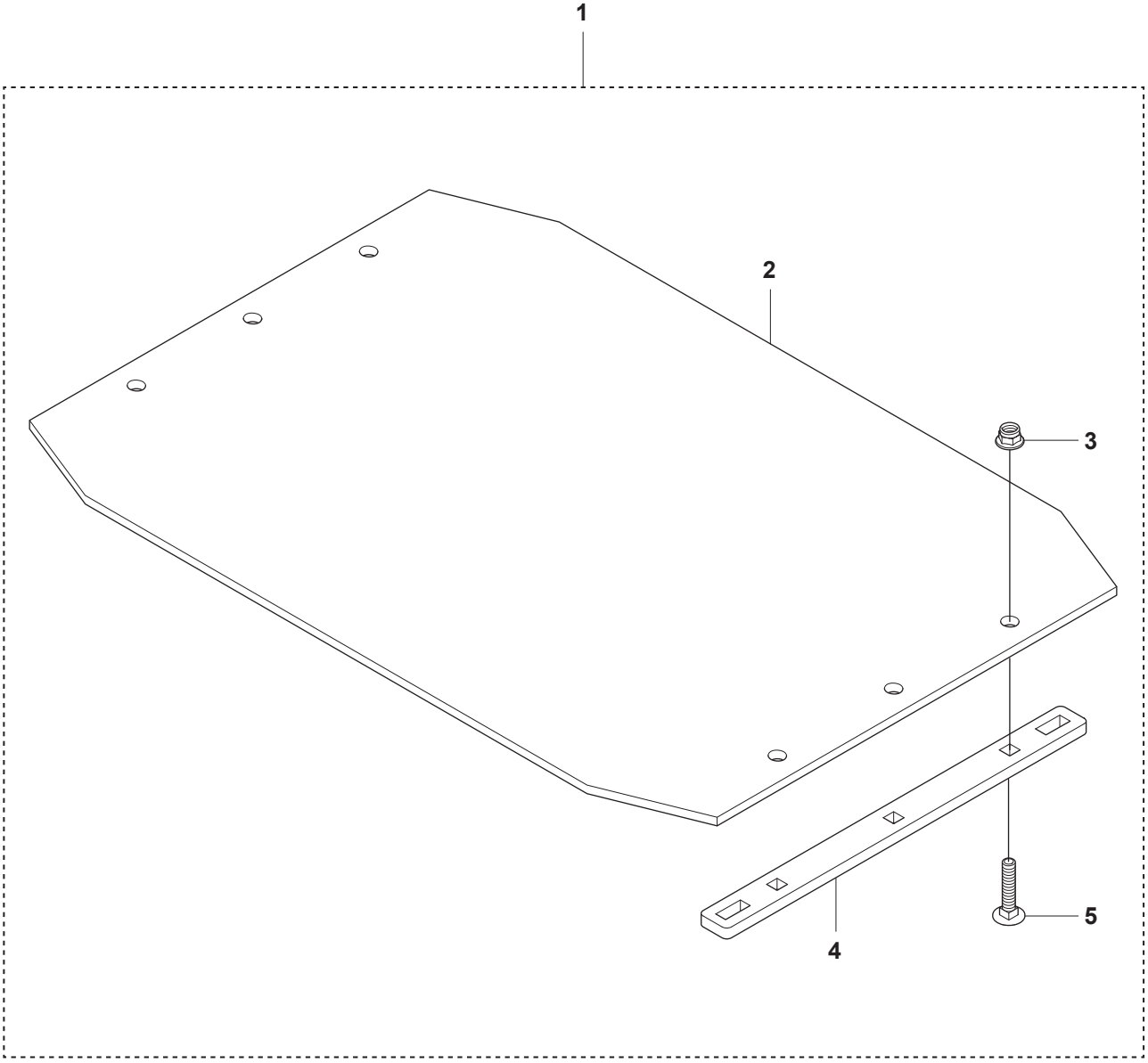

REF.	PART NO.	DESCRIPTION	REMARK	QTY.	KIT
1	594825801	BLOCK PAVING KIT		1	
2	594329101	PLATE		1	
3	595064701	LOCK NUT		4	
4	594447301	BRACKET		2	
5	597274701	BOLT		4	

RP 204
DECALS

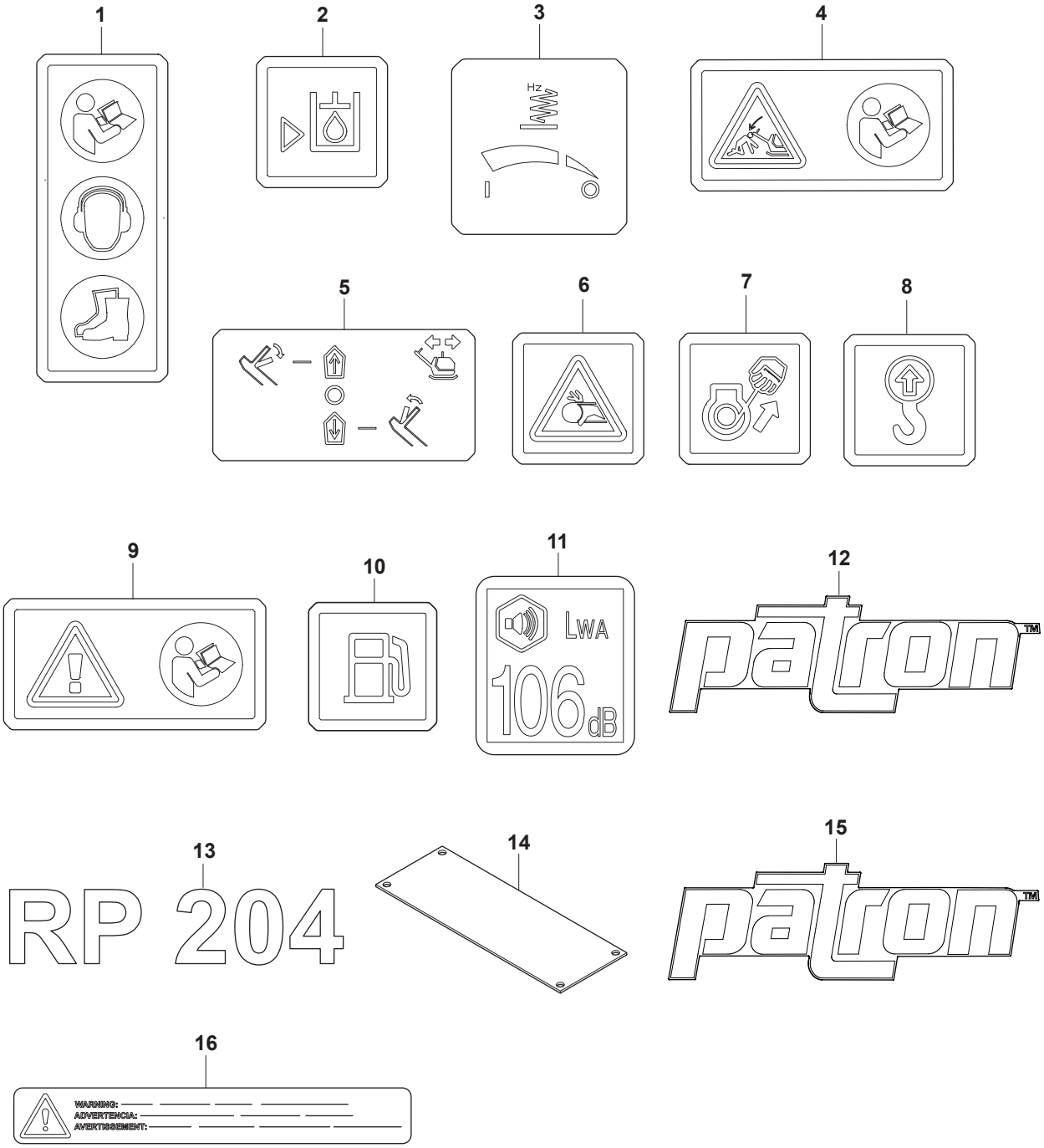

REF.	PART NO.	DESCRIPTION	REMARK	QTY.	KIT
1	594659601	DECAL	LABEL Safety	1	
2	595512801	DECAL	LABEL Hydraulic Oil Level	1	
3	594660501	DECAL	LABEL Throttle Control Non EPA	1	
4	594660601	DECAL	LABEL Safety, Lock Handle	1	
5	594660701	DECAL	LABEL Operator Panel	1	
6	594660801	DECAL	LABEL Safety, Rotating V-Belts	1	
7	594869601	DECAL	LABEL Manual start	1	
8	594660901	DECAL	LABEL Lifting Point	1	
9	594869701	DECAL	LABEL Safety, Read instruction	1	
10	595216401	DECAL	OIL	1	
11	594661501	DECAL	DECAL Noise 106 DB	1	
12	535571601	DECAL	LOGOTYPE PATRON label	1	
13	596466001	DECAL	LABEL PRODUCT NAME RP204	2	
14	594869501	DECAL	LABEL Securing Point	4	
15	596460601	DECAL	LABEL APT LOGO	1	
16	595871701	DECAL	PROP65 DECAL	2	